MOTOROLA

LM301A
LM201A

Operational Amplifiers

A general purpose operational amplifier that allows the user to choose the compensation capacitor best suited to his needs. With proper compensation, summing amplifier slew rates to 10 V/µs can be obtained.

- Low Input Offset Current: 20 nA Maximum Over Temperature Range
- External Frequency Compensation for Flexibility
- Class AB Output Provides Excellent Linearity
- Output Short Circuit Protection
- Guaranteed Drift Characteristics

OPERATIONAL AMPLIFIERS

SEMICONDUCTOR TECHNICAL DATA

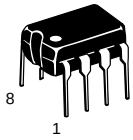

N SUFFIX
PLASTIC PACKAGE
CASE 626

D SUFFIX
PLASTIC PACKAGE
CASE 751
(SO–8)

Figure 1. Standard Compensation and Offset Balancing Circuit

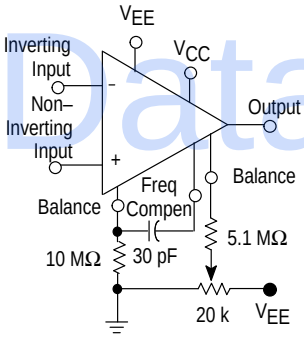

Figure 2. Double–Ended Limit Detector

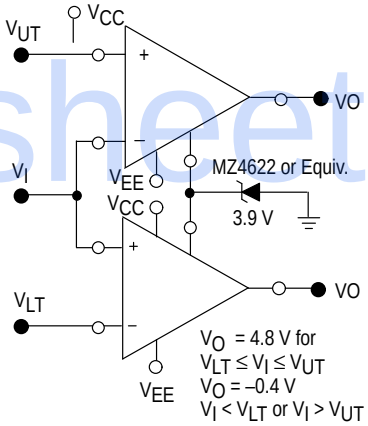

(Pins Not Shown Are Not Connected)

Figure 3. Representative Circuit Schematic

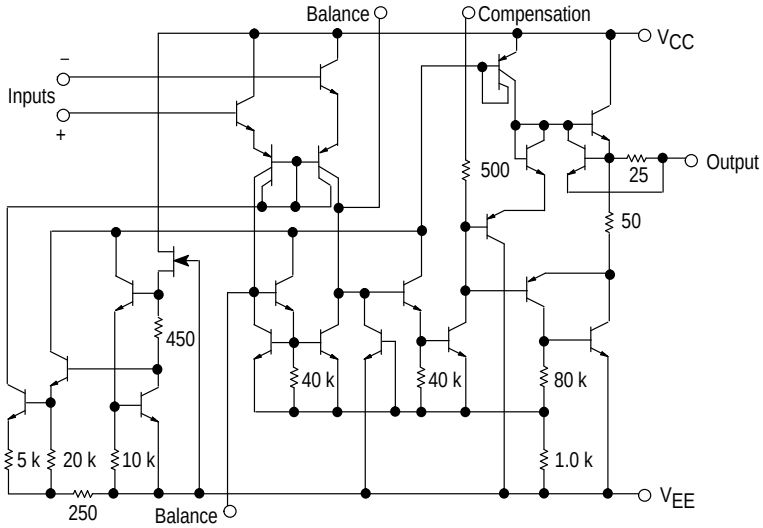

PIN CONNECTIONS

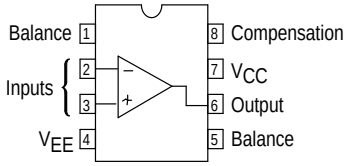

(Top View)

ORDERING INFORMATION

Device	Operating Temperature Range	Package
LM301AD LM301AN	T_A = 0° to +70°C	SO–8 Plastic DIP
LM201AD LM201AN	T_A = –25° to +85°C	SO–8 Plastic DIP

Datasheet.Cloud

© Motorola, Inc. 1996

MAXIMUM RATINGS

Rating	Symbol	Value		Unit
		LM201A	LM301A	
Power Supply Voltage	V_{CC}, V_{EE}	±22	±18	Vdc
Input Differential Voltage	V_{ID}	±30		V
Input Common Mode Range (Note 1)	V_{ICR}	±15		V
Output Short Circuit Duration	t_{SC}	Continuous		
Power Dissipation (Package Limitation) Plastic Dual–In–Line Package (LM201A/301A) Derate above T_A = +25°C	P_D	 625 5.0	 625 5.0	 mW mW/°C
Operating Ambient Temperature Range	T_A	–25 to +85	0 to +70	°C
Storage Temperature Range	T_{stg}	–65 to +150		°C

NOTE: 1. For supply voltages less than ±15 V, the absolute maximum input voltage is equal to the supply voltage.

ELECTRICAL CHARACTERISTICS (T_A = +25°C, unless otherwise noted.) Unless otherwise specified, these specifications apply for supply voltages from ±5.0 V to ±20 V for the LM201A, and from ±5.0 V to ±15 V for the LM301A.

Characteristic	Symbol	LM201A			LM301A			Unit
		Min	Typ	Max	Min	Typ	Max	
Input Offset Voltage (R_S ≤ 50 kΩ)	V_{IO}	–	0.7	2.0	–	2.0	7.5	mV
Input Offset Current	I_{IO}	–	1.5	10	–	3.0	50	nA
Input Bias Current	I_{IB}	–	30	75	–	70	250	nA
Input Resistance	r_i	1.5	4.0	–	0.5	2.0	–	MΩ
Supply Current V_{CC}/V_{EE} = ±20 V V_{CC}/V_{EE} = ±15 V	I_{CC},I_{EE}	 – –	 1.8 –	 3.0 –	 – –	 – 1.8	 – 3.0	mA
Large Signal Voltage Gain (V_{CC}/V_{EE} = ±15 V, V_O = ±10 V, R_L > 2.0 kΩ)	A_V	50	160	–	25	160	–	V/mV
The following specifications apply over the operating temperature range.								
Input Offset Voltage (R_S ≤ 50 kΩ)	V_{IO}	–	–	3.0	–	–	10	mV
Input Offset Current	I_{IO}	–	–	20	–	–	70	nA
Avg Temperature Coefficient of Input Offset Voltage T_A(min) ≤ T_A ≤ T_A (max)	$\Delta V_{IO}/\Delta T$	–	3.0	15	–	6.0	30	µV/°C
Avg Temperature Coefficient of Input Offset Current +25°C ≤ T_A ≤ T_A (max) T_A(min) ≤ T_A ≤ 25°C	$\Delta I_{IO}/\Delta T$	 – –	 0.01 0.02	 0.1 0.2	 – –	 0.01 0.02	 0.3 0.6	nA/°C
Input Bias Current	I_{IB}	–	–	100	–	–	300	nA
Large Signal Voltage Gain (V_{CC}/V_{EE} = ±15 V, V_O = ±10V, R_L > 2.0 kΩ)	A_{VOL}	25	–	–	15	–	–	V/mV
Input Voltage Range V_{CC}/V_{EE} = ±20 V V_{CC}/V_{EE} = ±15 V	V_{ICR}	 –15 –	 – –	 +15 –	 – –12	 – –	 – +12	V
Common Mode Rejection (R_S ≤ 50 kΩ)	CMR	80	96	–	70	90	–	dB
Supply Voltage Rejection (R_S ≤ 50 kΩ)	PSR	80	96	–	70	96	–	dB
Output Voltage Swing (V_{CC}/V_{EE} = ±15 V, R_L = ±10 kΩ, R_L > 2.0 kΩ)	V_O	±12 ±10	±14 ±13	– –	±12 ±10	±14 ±13	– –	V
Supply Currents (T_A = T_A(max), V_{CC}/V_{EE} = ±20 V)	I_{CC},I_{EE}	–	1.2	2.5	–	–	–	mA

Figure 4. Minimum Input Voltage Range

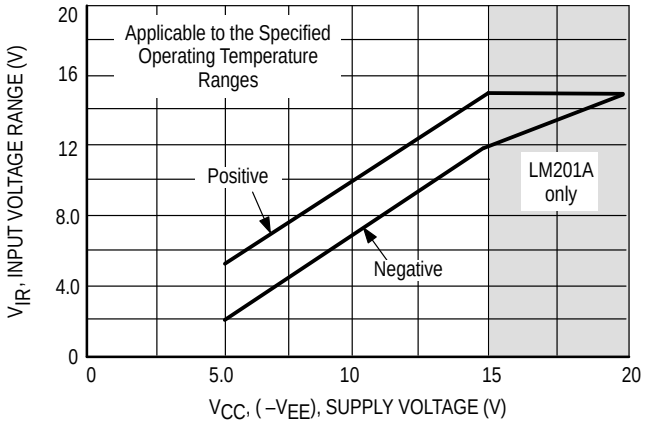

Figure 5. Minimum Output Voltage Swing

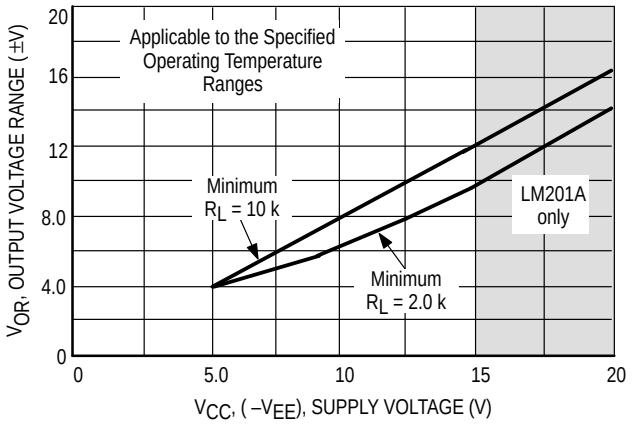

Figure 6. Minimum Voltage Gain

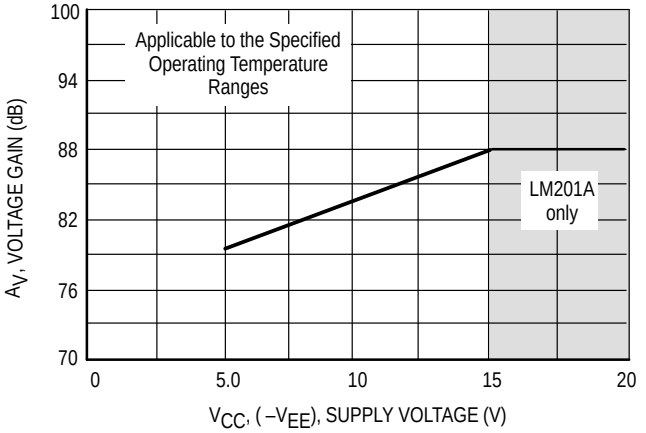

Figure 7. Typical Supply Currents

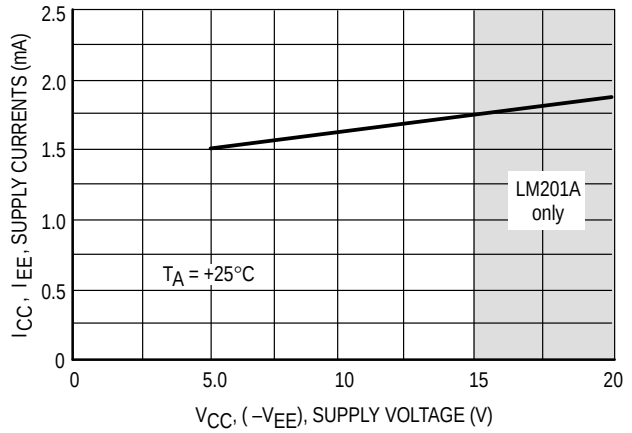

Figure 8. Open Loop Frequency Response

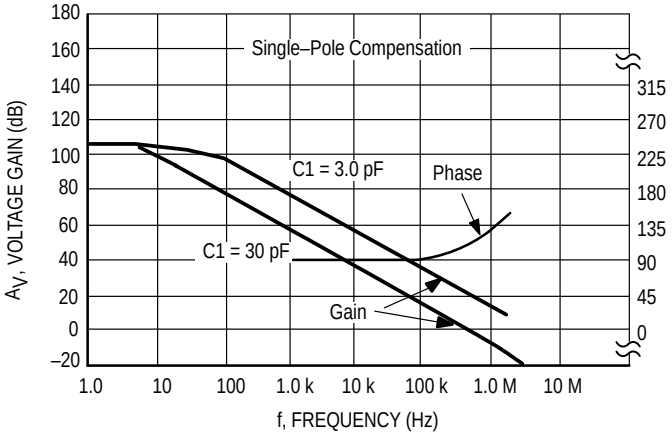

Figure 9. Large Signal Frequency Response

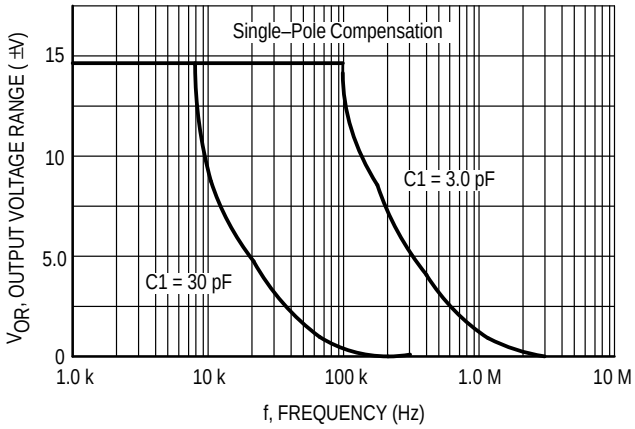

Figure 10. Voltage Follower Pulse Response

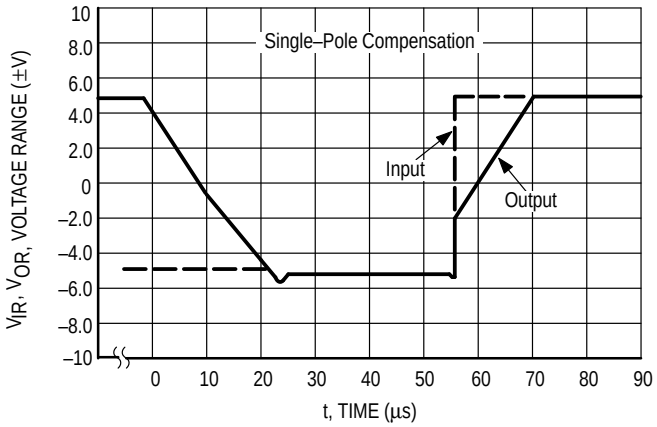

Figure 11. Open Loop Frequency Response

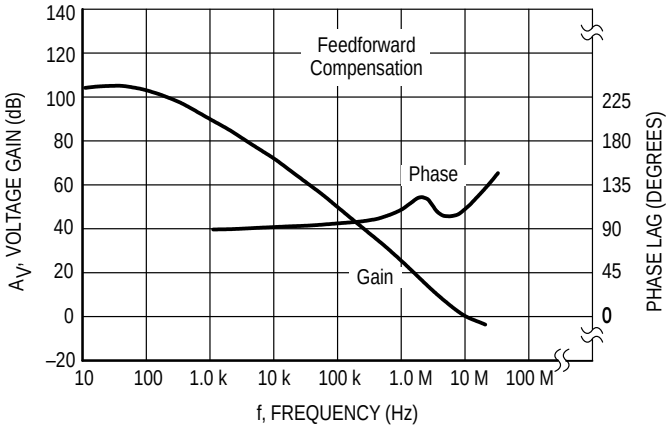

Figure 12. Large Signal Frequency Response

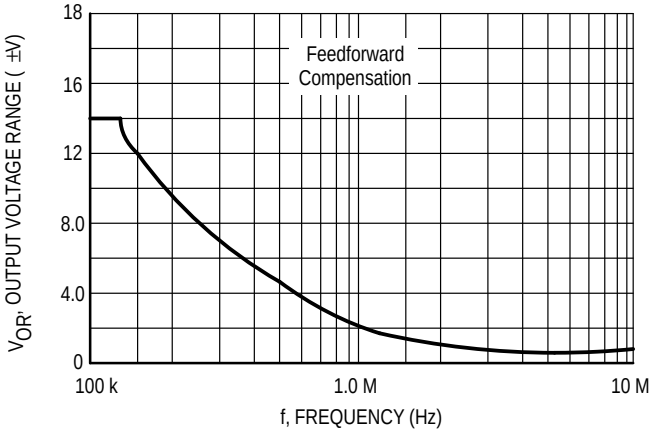

Figure 13. Inverter Pulse Response

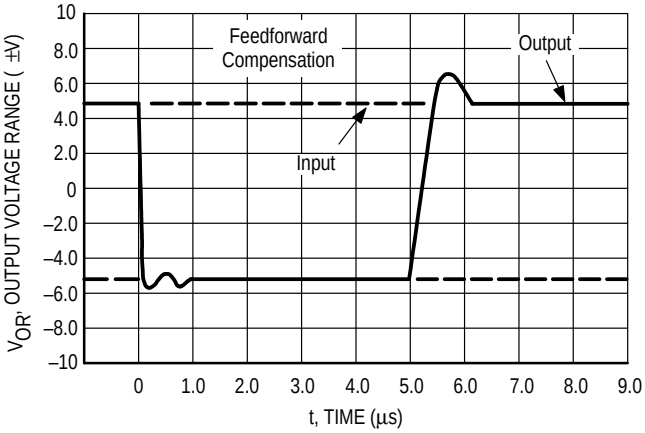

Figure 14. Single–Pole Compensation

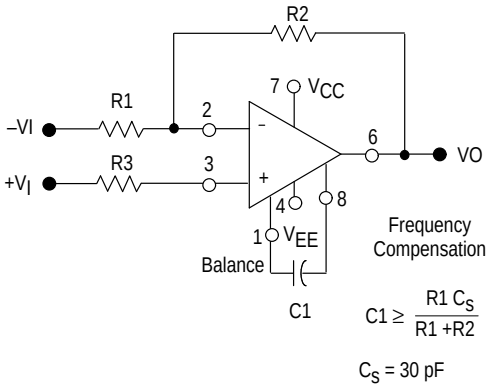
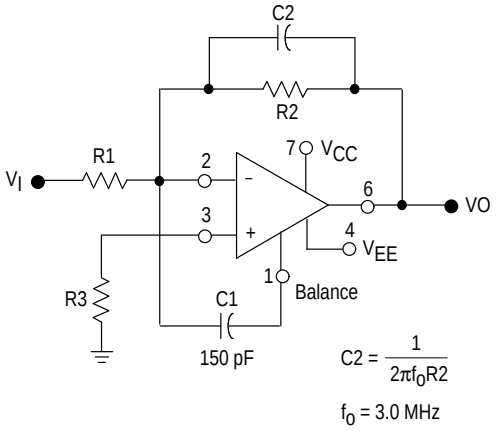
Figure 15. Feedforward Compensation