Surface Mount TRANSZORB® Transient Voltage Suppressors

DO-214AA (SMB)

PRIMARY CHARACTERISTICS	
V_{BR} uni-directional	6.8 V to 540 V
V_{BR} bi-directional	6.8 V to 220 V
P_{PPM}	600 W
P_D	5.0 W
I_{FSM} (uni-directional only)	100 A
T_J max.	150 °C

DEVICES FOR BI-DIRECTION APPLICATIONS

For bi-directional devices use CA suffix (e.g. P6SMB10CA).

Electrical characteristics apply in both directions.

FEATURES

- Low profile package
- Ideal for automated placement
- Glass passivated chip junction
- Available in uni-directional and bi-directional
- 600 W peak pulse power capability with a 10/1000 µs waveform, repetitive rate (duty cycle): 0.01 %
- Excellent clamping capability
- Very fast response time
- Low incremental surge resistance
- Meets MSL level 1, per J-STD-020, LF maximum peak of 260 °C
- Solder dip 260 °C, 40 s
- Component in accordance to RoHS 2002/95/EC and WEEE 2002/96/EC

Pb e3 RoHS COMPLIANT

TYPICAL APPLICATIONS

Use in sensitive electronics protection against voltage transients induced by inductive load switching and lighting on ICs, MOSFET, signal lines of sensor units for consumer, computer, industrial and telecommunication.

MECHANICAL DATA

Case: DO-214AA (SMB)

Molding compound meets UL 94 V-0 flammability rating

Base P/N-E3 - RoHS compliant, commercial grade

Base P/NHE3 - RoHS compliant, high reliability/ automotive grade (AEC Q101 qualified)

Terminals: Matte tin plated leads, solderable per J-STD-002 and JESD22-B102

E3 suffix meets JESD 201 class 1A whisker test, HE3 suffix meets JESD 201 class 2 whisker test

Polarity: For uni-directional types the band denotes cathode end, no marking on bi-directional types

MAXIMUM RATINGS (T_A = 25 °C unless otherwise noted)

PARAMETER	SYMBOL	VALUE	UNIT
Peak power dissipation with a 10/1000 µs waveform (1)(2) (Fig. 1)	P_{PPM}	600	W
Peak pulse current with a 10/1000 µs waveform (1)	I_{PPM}	See next table	A
Power dissipation on infinite heatsink T_A = 50 °C ,	P_D	5.0	W
Peak forward surge current 8.3 ms single half sine-wave uni-directional only (2)	I_{FSM}	100	A
Operating junction and storage temperature range	T_J, T_{STG}	- 65 to + 150	°C

Notes:

(1) Non-repetitive current pulse, per Fig. 3 and derated above T_A = 25 °C per Fig. 2

(2) Mounted on 0.2 x 0.2" (5.0 x 5.0 mm) copper pads to each terminal

Datasheet4U.com

ELECTRICAL CHARACTERISTICS (T_A = 25 °C unless otherwise noted)										
GENERAL SEMICONDUCTOR PART NUMBER	DEVICE MARKING CODE		BREAKDOWN VOLTAGE V_{BR} AT I_T (1) (V)		TEST CURRENT I_T (mA)	STAND-OFF VOLTAGE V_{WM} (V)	MAXIMUM REVERSE LEAKAGE AT V_{WM} I_D (3) (μA)	MAXIMUM PEAK PULSE CURRENT I_{PPM} (2) (A)	MAXIMUM CLAMPING VOLTAGE AT I_{PPM} V_C (V)	MAXIMUM TEMP. COEFFICIENT OF V_{BR} (%/°C)
	UNI	BI	MIN.	MAX.						
P6SMB6.8A	6V8A	6V8C	6.45	7.14	10	5.80	1000	57.1	10.5	0.057
P6SMB7.5A	7V5A	7V5C	7.13	7.88	10	6.40	500	53.1	11.3	0.061
P6SMB8.2A	8V2A	8V2C	7.79	8.61	10	7.02	200	49.6	12.1	0.065
P6SMB9.1A	9V1A	9V1C	8.65	9.55	1.0	7.78	50	44.8	13.4	0.068
P6SMB10A	10A	10C	9.50	10.5	1.0	8.55	10	41.4	14.5	0.073
P6SMB11A	11A	11C	10.5	11.6	1.0	9.40	5.0	38.5	15.6	0.075
P6SMB12A	12A	12C	11.4	12.6	1.0	10.2	5.0	35.9	16.7	0.078
P6SMB13A	13A	13C	12.4	13.7	1.0	11.1	5.0	33.0	18.2	0.081
P6SMB15A	15A	15C	14.3	15.8	1.0	12.8	1.0	28.3	21.2	0.084
P6SMB16A	16A	16C	15.2	16.8	1.0	13.6	1.0	26.7	22.5	0.086
P6SMB18A	18A	18C	17.1	18.9	1.0	15.3	1.0	23.8	25.2	0.088
P6SMB20A	20A	20C	19.0	21.0	1.0	17.1	1.0	21.7	27.7	0.090
P6SMB22A	22A	22C	20.9	23.1	1.0	18.8	1.0	19.6	30.6	0.092
P6SMB24A	24A	24C	22.8	25.2	1.0	20.5	1.0	18.1	33.2	0.094
P6SMB27A	27A	27C	25.7	28.4	1.0	23.1	1.0	16.0	37.5	0.096
P6SMB30A	30A	30C	28.5	31.5	1.0	25.6	1.0	14.5	41.4	0.097
P6SMB33A	33A	33C	31.4	34.7	1.0	28.2	1.0	13.1	45.7	0.098
P6SMB36A	36A	36C	34.2	37.8	1.0	30.8	1.0	12.0	49.9	0.099
P6SMB39A	39A	39C	37.1	41.0	1.0	33.3	1.0	11.1	53.9	0.100
P6SMB43A	43A	43C	40.9	45.2	1.0	36.8	1.0	10.1	59.3	0.101
P6SMB47A	47A	47C	44.7	49.4	1.0	40.2	1.0	9.3	64.8	0.101
P6SMB51A	51A	51C	48.5	53.6	1.0	43.6	1.0	8.6	70.1	0.102
P6SMB56A	56A	56C	53.2	58.8	1.0	47.8	1.0	7.8	77.0	0.103
P6SMB62A	62A	62C	58.9	65.1	1.0	53.0	1.0	7.1	85.0	0.104
P6SMB68A	68A	68C	64.6	71.4	1.0	58.1	1.0	6.5	92.0	0.104
P6SMB75A	75A	75C	71.3	78.8	1.0	64.1	1.0	5.8	103	0.105
P6SMB82A	82A	82C	77.9	86.1	1.0	70.1	1.0	5.3	113	0.105
P6SMB91A	91A	91C	86.5	95.5	1.0	77.8	1.0	4.8	125	0.106
P6SMB100A	100A	100C	95.0	105	1.0	85.5	1.0	4.4	137	0.106
P6SMB110A	110A	110C	105	116	1.0	94.0	1.0	3.9	152	0.107
P6SMB120A	120A	120C	114	126	1.0	102	1.0	3.6	165	0.107
P6SMB130A	130A	130C	124	137	1.0	111	1.0	3.4	179	0.107
P6SMB150A	150A	150C	143	158	1.0	128	1.0	2.9	207	0.108
P6SMB160A	160A	160C	152	168	1.0	136	1.0	2.7	219	0.108
P6SMB170A	170A	170C	162	179	1.0	145	1.0	2.6	234	0.108
P6SMB180A	180A	180C	171	189	1.0	154	1.0	2.4	246	0.108
P6SMB200A	200A	200C	190	210	1.0	171	1.0	2.2	274	0.108
P6SMB220A	220A	220C	209	231	1.0	185	1.0	1.8	328	0.108
P6SMB250A	250A	-	237	263	1.0	214	1.0	1.74	344	0.110
P6SMB300A	300A	-	285	315	1.0	256	1.0	1.45	414	0.110
P6SMB350A	350A	-	333	368	1.0	300	1.0	1.24	482	0.110
P6SMB400A	400A	-	380	420	1.0	342	1.0	1.10	548	0.110
P6SMB440A	440A	-	418	462	1.0	376	1.0	1.00	602	0.110
P6SMB480A	480A	-	456	504	1.0	408	1.0	0.91	658	0.110
P6SMB510A	510A	-	485	535	1.0	434	1.0	0.86	698	0.110
P6SMB540A	540A	-	513	567	1.0	459	1.0	0.81	740	0.110

Notes:

(1) Pulse test: $t_p \leq 50$ ms

(2) Surge current waveform per Fig. 3 and derate per Fig. 2

(3) For bi-directional types with V_{WM} of 10 V and less, the I_D limit is doubled

(4) All terms and symbols are consistent with ANSI/IEEE C62.35

(5) V_F = 3 V at I_F = 50 A (uni-directional only)

THERMAL CHARACTERISTICS (T_A = 25 °C unless otherwise noted)			
PARAMETER	**SYMBOL**	**VALUE**	**UNIT**
Thermal resistance, junction to ambient air (1)	$R_{\theta JA}$	100	°C/W
Thermal resistance, junction to leads	$R_{\theta JL}$	20	°C/W

Note:

(1) Mounted on minimum recommended pad layout

ORDERING INFORMATION (Example)				
PREFERRED P/N	**UNIT WEIGHT (g)**	**PREFERRED PACKAGE CODE**	**BASE QUANTITY**	**DELIVERY MODE**
P6SMB6.8A-E3/52	0.096	52	750	7" diameter plastic tape and reel
P6SMB6.8A-E3/5B	0.096	5B	3200	13" diameter plastic tape and reel
P6SMB6.8AHE3/52 (1)	0.096	52	750	7" diameter plastic tape and reel
P6SMB6.8AHE3/5B (1)	0.096	5B	3200	13" diameter plastic tape and reel

Note:

(1) Automotive grade AEC Q101 qualified

RATINGS AND CHARACTERISTICS CURVES

(T_A = 25 °C unless otherwise noted)

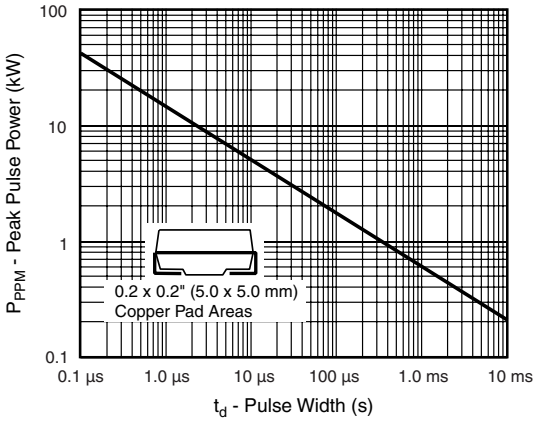

Figure 1. Peak Pulse Power Rating Curve

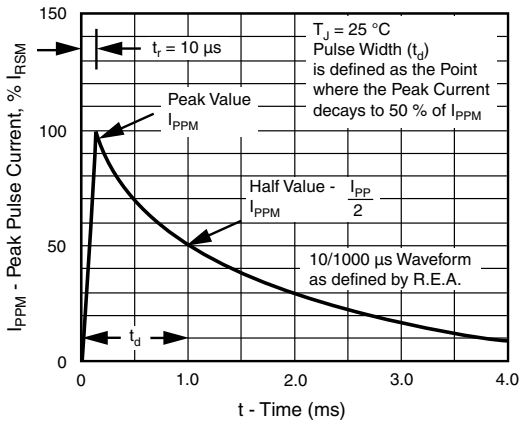

Figure 3. Pulse Waveform

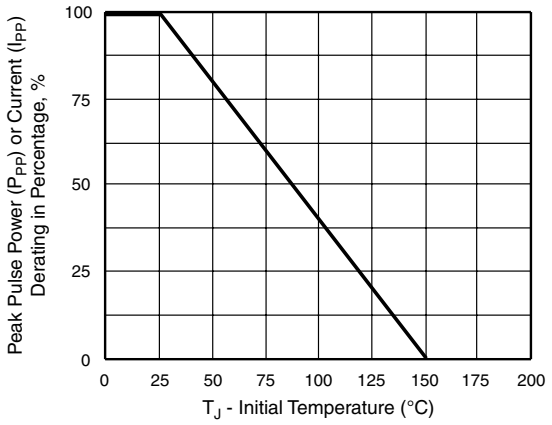

Figure 2. Pulse Power or Current vs. Initial Junction Temperature

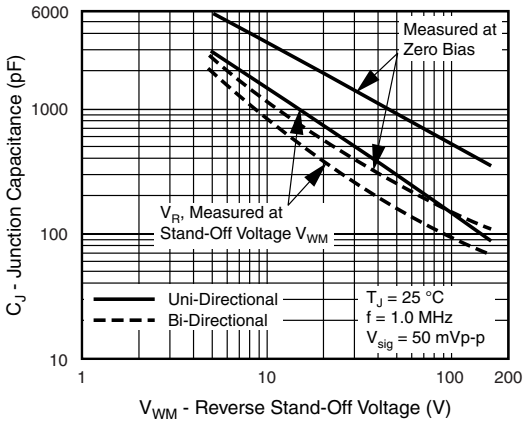

Figure 4. Typical Junction Capacitance

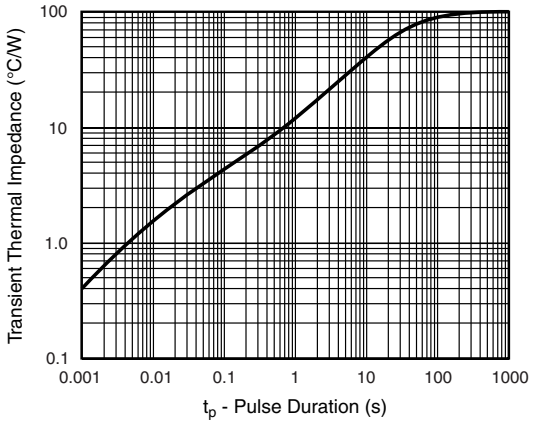

Figure 5. Typical Transient Thermal Impedance

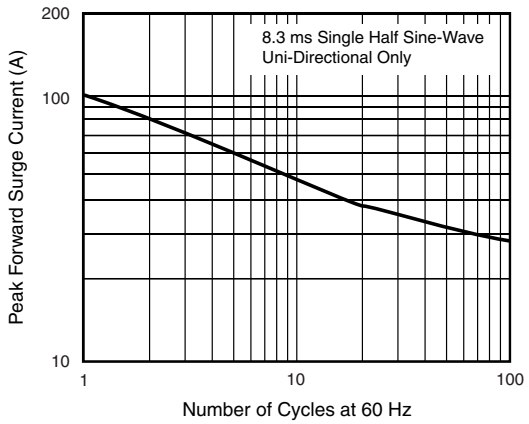

Figure 6. Maximum Non-Repetitive Peak Forward Surge Current

PACKAGE OUTLINE DIMENSIONS in inches (millimeters)

DO-214AA (SMB)

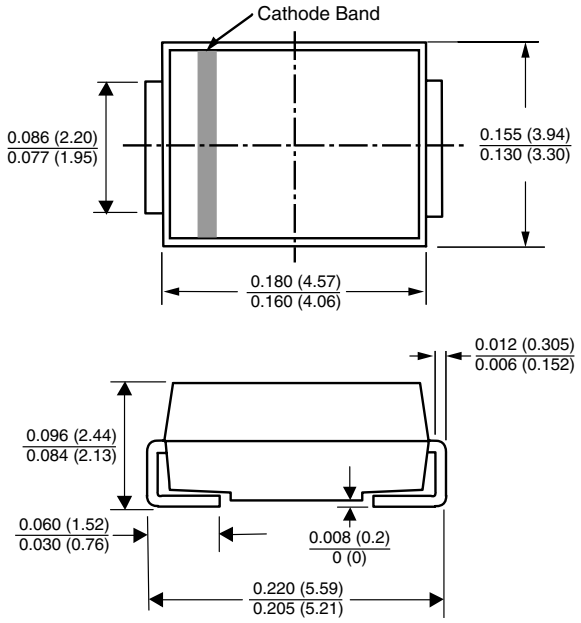

Mounting Pad Layout

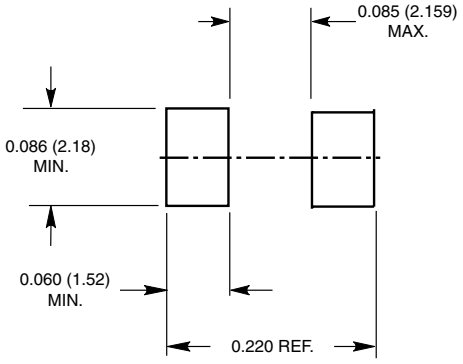

Disclaimer

ALL PRODUCT, PRODUCT SPECIFICATIONS AND DATA ARE SUBJECT TO CHANGE WITHOUT NOTICE TO IMPROVE RELIABILITY, FUNCTION OR DESIGN OR OTHERWISE.

Vishay Intertechnology, Inc., its affiliates, agents, and employees, and all persons acting on its or their behalf (collectively, "Vishay"), disclaim any and all liability for any errors, inaccuracies or incompleteness contained in any datasheet or in any other disclosure relating to any product.

Vishay makes no warranty, representation or guarantee regarding the suitability of the products for any particular purpose or the continuing production of any product. To the maximum extent permitted by applicable law, Vishay disclaims (i) any and all liability arising out of the application or use of any product, (ii) any and all liability, including without limitation special, consequential or incidental damages, and (iii) any and all implied warranties, including warranties of fitness for particular purpose, non-infringement and merchantability.

Statements regarding the suitability of products for certain types of applications are based on Vishay's knowledge of typical requirements that are often placed on Vishay products in generic applications. Such statements are not binding statements about the suitability of products for a particular application. It is the customer's responsibility to validate that a particular product with the properties described in the product specification is suitable for use in a particular application. Parameters provided in datasheets and/or specifications may vary in different applications and performance may vary over time. All operating parameters, including typical parameters, must be validated for each customer application by the customer's technical experts. Product specifications do not expand or otherwise modify Vishay's terms and conditions of purchase, including but not limited to the warranty expressed therein.

Except as expressly indicated in writing, Vishay products are not designed for use in medical, life-saving, or life-sustaining applications or for any other application in which the failure of the Vishay product could result in personal injury or death. Customers using or selling Vishay products not expressly indicated for use in such applications do so at their own risk and agree to fully indemnify and hold Vishay and its distributors harmless from and against any and all claims, liabilities, expenses and damages arising or resulting in connection with such use or sale, including attorneys fees, even if such claim alleges that Vishay or its distributor was negligent regarding the design or manufacture of the part. Please contact authorized Vishay personnel to obtain written terms and conditions regarding products designed for such applications.

No license, express or implied, by estoppel or otherwise, to any intellectual property rights is granted by this document or by any conduct of Vishay. Product names and markings noted herein may be trademarks of their respective owners.

Material Category Policy

Vishay Intertechnology, Inc. hereby certifies that all its products that are identified as RoHS-Compliant fulfill the definitions and restrictions defined under Directive 2011/65/EU of The European Parliament and of the Council of June 8, 2011 on the restriction of the use of certain hazardous substances in electrical and electronic equipment (EEE) - recast, unless otherwise specified as non-compliant.

Please note that some Vishay documentation may still make reference to RoHS Directive 2002/95/EC. We confirm that all the products identified as being compliant to Directive 2002/95/EC conform to Directive 2011/65/EU.